SUMMARY. Cubanite as described from such typical localities as southeastern Cuba, also Tunaberg and Kafveltorp in Sweden, is compared with chalmersite from Brazil and Alaska. In all respects in which these minerals have been adequately described they are identical. Cubanite is the older name. Cubanite is unique among known strongly magnetic substances in having only one axis of high magnetic susceptibility.

EUHEDRAL MAGNESITE CRYSTALS FROM SAN JOSE, CALIFORNIA

AUSTIN F. ROGERS, *Stanford University*

In this country magnesite has been found in two fairly distinct varieties: (1) the compact white or so-called amorphous variety, which is really microcrystalline, a fairly common mineral in the serpentines of California, and (2) the distinctly crystalline or cleavable variety, which occurs in abundance in Stevens County, Washington, as a replacement of dolomitic limestone.

A somewhat different cleavable variety occurs in the San Juan quicksilver mine (now abandoned), five miles south of the city of San Jose, Santa Clara County, California. Here the magnesite occurs in veins in an alteration product of serpentine, which consists largely of opal and magnesite with small amounts of cinnabar and pyrite and a little residual antigorite. A microscopic examination of a thin section shows that the magnesite had replaced the opal and the opal in turn had replaced the antigorite of serpentine. The serpentine is doubtless an alteration product of peridotite.

The veins of magnesite are from 1 to 10 cm. in width and show a more or less banded structure. The magnesite is colorless to pale amber-colored with cleavage surfaces up to 5 mm. in size. In appearance it resembles dolomite, but chemical tests show only a small amount of calcium. The specific gravity determined on about 4 g. of carefully selected material is 3.052. Quartz, chalcedony, and occasionally a little bitumen are found directly associated with the magnesite.

In cavities the magnesite is found in distinct euhedral crystals. The exceeding rarity of crystallized magnesite accounts for the present note. As far as can be ascertained, magnesite crystals have never been described from the United States before; in fact, there are records of only seven or eight occurrences taken the world over.

The crystals from the San Juan mine measure from about 1 mm. up to 7 or 8 mm. in longest dimension. The dominant forms are the scalenohedron $V(21\bar{3}1)$ and pinacoid $c(0001)$, which are modified by the prism $a(11\bar{2}0)$ and very narrow faces of the rhombohedron $f(02\bar{2}1)$. Fig. 1, which was kindly drawn for me by Miss Lillian M. Dobbel, represents a crystal in ideal development, but the crystals are usually so attached that only the polar edges of the scalenohedron are visible. It was, in fact, some time before the prism faces were recognized.

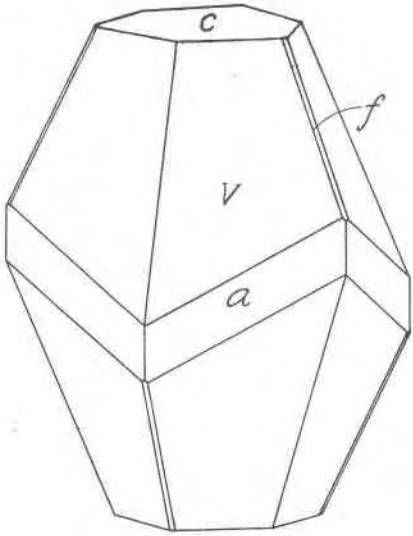

FIG. 1. MAGNESITE CRYSTAL FROM THE SAN JUAN MINE, SAN JOSE, CALIFORNIA

As the faces of the crystals are dull, the scalenohedron $V(21\bar{3}1)$ was identified by the following measurements made on the stage of a polarizing microscope: $VV(21\bar{3}1:\bar{2}3\bar{1}1) = 74°$ (calc. value $= 74°$ $46'$); $VV(21\bar{3}1:3\bar{1}\bar{2}1) = 35°$ (calc. value $= 35°20\frac{1}{2}'$). The rhombohedron $f(02\bar{2}1)$ and the prism $a(11\bar{2}0)$ were identified by the fact that faces of these forms truncate respectively the short polar and lateral edges of the scalenohedron. The angle $(10\bar{1}1:\bar{1}101)$ of a cleavage rhomohedron was measured on a reflection goniometer and found to be $72°42'$, which agrees well with Koksharov's value of $72°36'$.

That the mineral described in this article is magnesite is definitely proved by the following chemical analysis, which was made by Mr. K. S. Boynton.

ANALYSIS OF MAGNESITE FROM THE SAN JUAN MINE, SAN JOSE, CALIFORNIA.
K. S. BOYNTON, ANALYST.

	ANALYSIS	THEORY FOR $MgCO_3$
MgO	46.26	47.62
CaO	1.74	.....
FeO	1.27	.....
CO_2	50.48	52.38
H_2O	nil.	.....
Insol.	nil.	.....
Total	99.75	100.00

The mineral used for this analysis was the cleavable material of the veins, but it grades into and is exactly like the cleavage fragments of the euhedral crystals described above.

In cleavage fragments, two values of the index of refraction were determined by the immersion method in comparison with liquids of known indices of refraction. One of these values $n_\gamma = 1.704 \pm .001$. The other value, which may be designated $n_x = 1.599 \pm .001$, is intermediate between n_γ and n_α, as may be seen from Fig. 2 which represents two orthographic projections of a cleavage fragment made on the $(10\bar{1}1)$ and $(\bar{1}2\bar{1}0)$ planes.

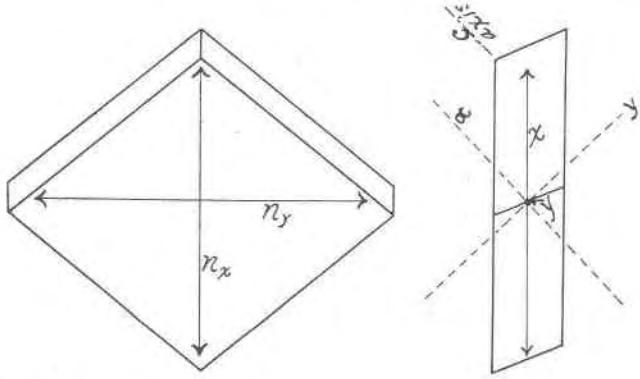

FIG. 2. OPTICAL RELATIONS IN CLEAVAGE FRAGMENTS OF MAGNESITE (AND OTHER RHOMBOHEDRAL CARBONATES)

(The drawings are orthographic projections made on planes at right angles to each other. In these drawings α, x, γ are directions and $n\alpha$, n_x, and $n\gamma$ are the indices of refraction for these directions.)

In the determination of the rhombohedral carbonate minerals, this intermediate value n_x is more important than n_α, which is obtained with difficulty, and it would seem advisable to include it in future descriptions of these minerals.